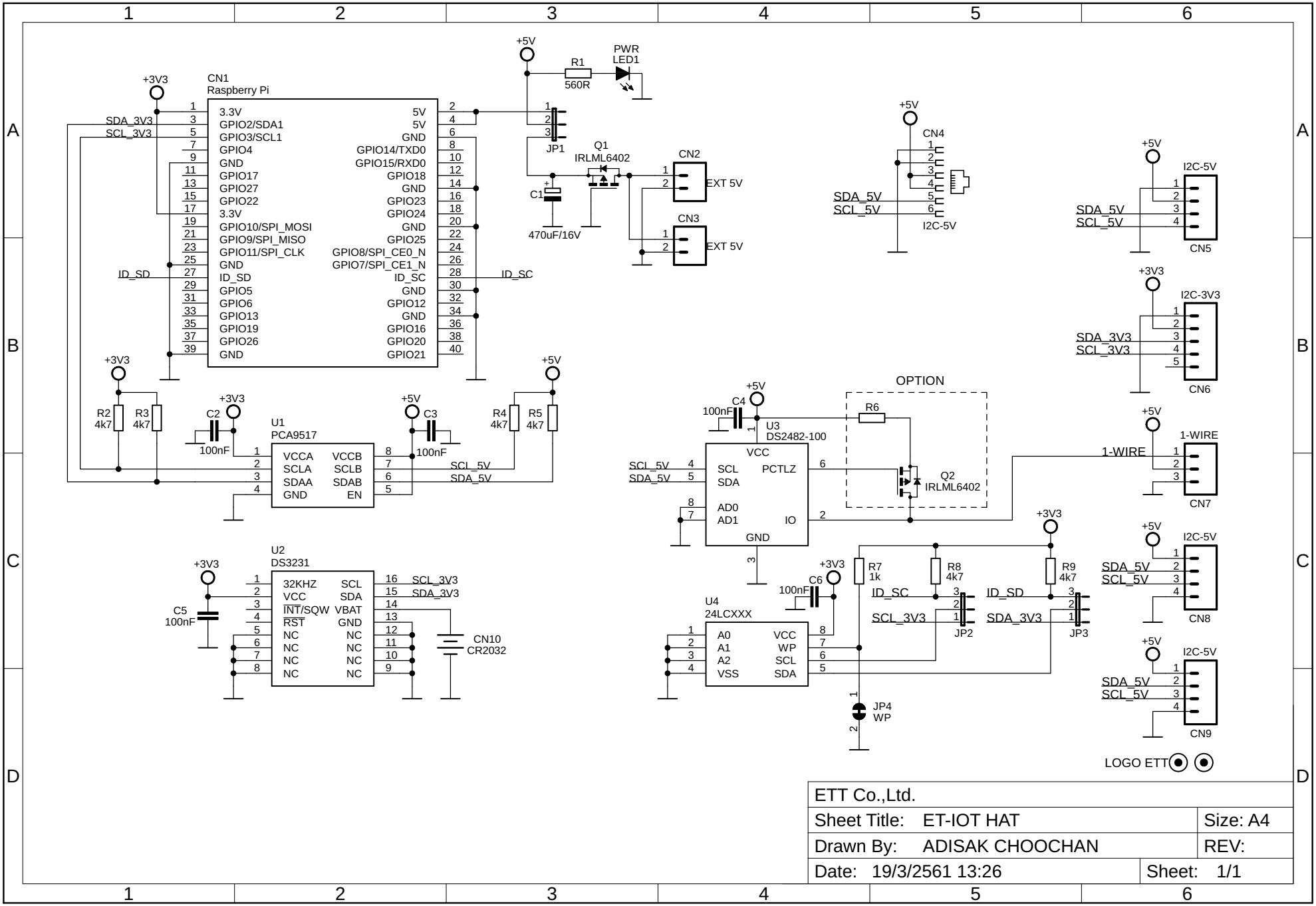

ETT Co.,Ltd.		
Sheet Title: ET-IOT HAT		Size: A4
Drawn By: ADISAK CHOOCHAN		REV:
Date: 19/3/2561 13:26	Sheet: 1/1	